Road barrier U-14 / U-25 50 cm high-yellow

SKU: BA50PEYEL

Gross Price: PLN 356.70

Net Price: PLN 290.00

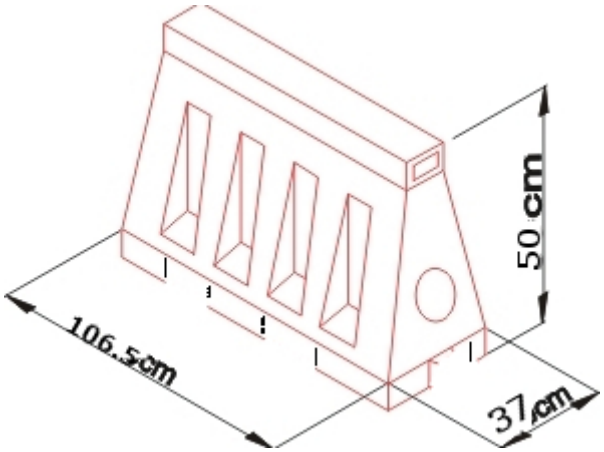

Technical Specification

Attribute	Value
Dimension	1000x370x500 mm
Color	Yellow
Material	PE
Weight	15,5 kg
Wall thickness	4-5mm
Shipping time	3-7 days
Production time of 100 pcs	8 days

Description

Yellow Plastic Road Barrier – premium quality & maximum durability Our yellow plastic road barrier is made from thick, durable polyethylene (PE), ensuring exceptional strength, weather resistance and long-term reliability. The bright yellow color guarantees excellent visibility, improving safety in all conditions. We are a long-established manufacturer and direct importer of road safety equipment, well-known across European markets. Most of our products ship directly from our warehouse, allowing fast delivery and competitive pricing. Recommended use – compliant with traffic regulations According to road safety standards, this barrier is designed for: road works & construction zones, securing hazardous areas, guiding pedestrian and vehicle flow, lane separation, temporary traffic arrangements. With dimensions 100 cm × 50 cm and weight 16 kg, the barrier is stable, robust and easy to install. Additional possible uses Warehouse zone demarcation. Event and public venue crowd control. Construction site safety. Parking lot separation. Industrial hall protection systems. Why choose our barrier? premium PE material, optimal visibility & durability, excellent price-to-quality ratio, fast dispatch from our warehouse, trusted manufacturer & importer, wide range of road safety products, wholesale and retail across Europe.