BetonBox 120x120x50

SKU: BetBox120x120x50

Gross Price: PLN 4,059.00

Net Price: PLN 3,300.00

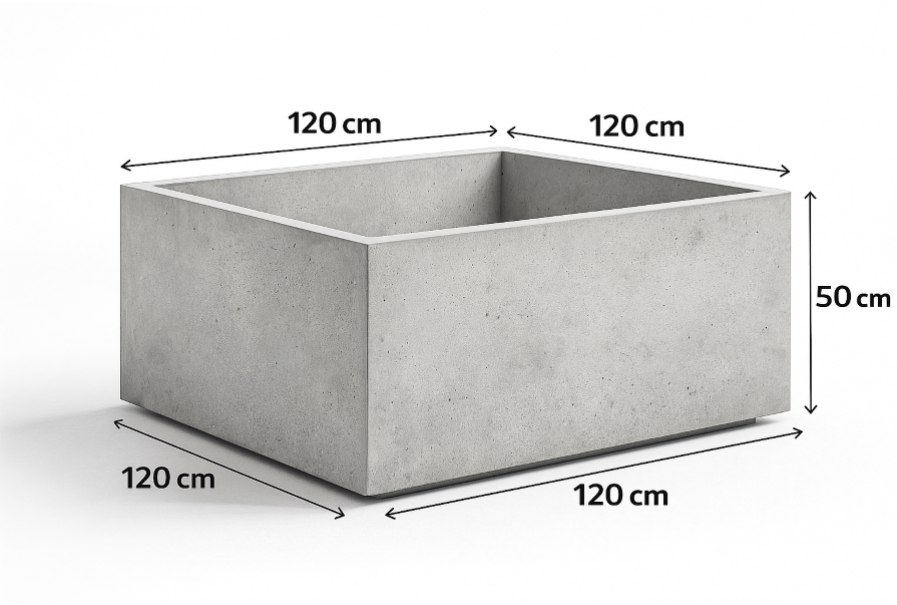

Technical Specification

Attribute	Value
Dimension	L 120 x B 120 x H 50 cm
Color	Grey
Material	Beton C30 / 37
Weight	360 kg
Wall thickness	50 mm
Shipping time	14-30 days

Description

BetonBox Concrete Planter – Premium Architectural Concrete for Timeless Arrangements

Product dimensions:
The BetonBox series includes concrete planters manufactured in a wide range of sizes:

- Height: 40–100 cm
- Width: 30–150 cm
- Wall thickness: 3–6 cm

Made of high-performance **C30/37 architectural GRC concrete**, reinforced with dispersed zircon fibres for superior structural strength and exceptional bending resistance (U ≥ 5 MPa). Each element includes a drainage opening, hydrophobic protection, surface impregnation and dimensional accuracy within ±15 mm.

Technical Excellence and Superior Material Quality

Every BetonBox planter is produced with the highest craftsmanship standards, using advanced GRC technology. This ensures extraordinary durability, stability and long-term resistance to external conditions. The material withstands moisture, frost, UV radiation and rapid temperature changes, making it ideal for year-round outdoor use.

Architectural concrete does not accumulate heat, which protects delicate plants from overheating. The hydrophobic and impregnated surface reduces dirt absorption, making maintenance easier and improving overall longevity.

Because each planter is created as a monolithic structure, it offers enhanced strength and eliminates weak points found in glued or assembled alternatives.

Key Benefits and Added Value

Choosing a BetonBox planter provides numerous advantages appreciated by both private users and professional landscapers:

- Excellent resistance to weather conditions
- Outstanding stability, even during strong winds
- Minimalist and elegant aesthetics suitable for any architectural style
- Neutral thermal behaviour favourable for plant health
- Impregnated surface for reduced staining and easier cleaning
- Attractive price-to-quality ratio
- Covered by a manufacturer’s warranty
- Produced from premium-grade materials used in professional architectural applications

Customers who purchased these planters report high satisfaction with their durability, design and overall value. Many return for additional sizes and colours, recognising the long-lasting quality of the BetonBox series.

Intended Use and Application Scenarios

BetonBox planters enhance aesthetics and functionality in a wide variety of locations:

- Private gardens, terraces, patios and balconies
- Public spaces, promenades and pedestrian areas
- Hotel and restaurant outdoor arrangements
- Commercial buildings, office surroundings and business parks
- Interior designs requiring strong modern decorative elements

Their universal form allows them to complement both minimalist environments and vibrant, colourful arrangements.

Five Additional Creative Uses

1. Natural partitions for dividing functional zones in outdoor spaces
2. Structural supports or bases for integrated seating areas
3. Decorative containers for trees and shrubs in commercial settings
4. Visual anchors for modern urban landscaping concepts
5. Durable protective barriers for entrances, pathways or public facilities

---

Trusted Manufacturer – Fast Delivery and Proven Quality

Our company has been supplying architectural concrete products for many years. We collaborate exclusively with manufacturers capable of meeting the highest European quality standards. As a recognised supplier to both wholesale and retail customers across Europe, we deliver consistent reliability, excellent product availability and professional service.

We offer exceptionally fast order fulfilment times — probably the fastest on the market — ensuring that customers receive their products quickly and efficiently.

Your decision to choose a BetonBox planter is an excellent one. Thousands of satisfied clients confirm the remarkable quality, long lifespan, elegant design and outstanding value of these premium planters.